A Flight Opportunities Program Tour

Ames Research Center

June 26, 2012

Flight Opportunities Program Video

- Go to YouTube at http://www.youtube.com/watch?v=3pt8n_FcLRY

Is NASA Truly in Transition?

- New Public-Private Partnerships to Lower Costs
- Use commercial space transport services for cheaper more routine access to LEO
- NASA to be a good/smart customer for industry
- Increased collaboration to leverage resources
- Pursues smaller/smarter mission architectures
- Broader participation for innovation in space exploration and technology development
- Implement the new ***Space Technology Program*** within the Office of the Chief Technologist (OCT)

Why New Space Technology?

- Smaller, smarter technology cheaper to launch
- Going beyond LEO requires new capabilities
- New technology solutions engage students, entrepreneurs, and provide societal benefits
- Cross-cutting technologies with higher Technology Readiness Levels support future applications
- Space Technology Program has 10 sub-programs including the ***Flight Opportunities Program (FOP)***

What Kinds of Space Technologies?

From NASA Tech Roadmaps	NAS - 16 Major Areas
2.2.1 - Electric Propulsion 2.2.3 - (Nuclear) Thermal Propulsion 3.1.3 - Solar Power Generation (Photovoltaic &Thermal) 3.1.5 - Fission (Power) 4.2.1 - Extreme Terrain Mobility 6.3.2 - Long-Duration (Crew) Health 8.1.1 - Detectors & Focal Planes 8.1.3 - (Instrument & Sensor) Optical Systems 8.2.4 - High-Contrast Imaging & Spectroscopy Technologies 8.3.3 - In Situ (Instruments & Sensors) *(X = crosscut several areas)*	14.1.2 - Active Thermal Control of Cryogenic Systems X.1 - Radiation Mitigation for Human Spaceflight X.2 - Lightweight & Multifunctional Materials & Structures X.3 - Environmental Control & Life Support Systems X.4 - Guidance, Navigation & Control X.5 - Entry, Descent & Landing (Thermal Protection Systems) ***NASA Space Technology Priorities Vetted by National Academy of Sciences***

Why a Flight Opportunities Program?

- To facilitate the advancement of research technologies to high TRLs via flight of payloads on commercial suborbital platforms in space-relevant environments
- To foster growth in the emerging suborbital reusable vehicle industry by funding flights for selected payloads and helping to “prime the pump” for research

What Does FOP Actually Do?

- Solicit, competitively *select, manifest and facilitate the flight readiness* of technology payloads provided by researchers
- Selection based on *payload readiness & technology relevance* to NASA Technology Roadmaps and priorities
- *Contracts with approved commercial suborbital platform providers* to fly research payloads with re-fly options

How Does FOP Facilitate PL Flights?

1 - IDENTIFY NEW PAYLOADS
- *FOP releases solicitation*
- *researchers submit proposals*
- *evaluate & select the best proposals*

2 - DEFINE PAYLOAD REQMTS & AGREEMENTS w NASA
- *researcher payload tasks*
- *FOP facilitation tasks*
- *payload technology advancement & safety plans*
- *payload is manifested*

3 - PAYLOAD UPGRADES TO FLIGHT READINESS
- *configuration/interfaces*
- *hazard/risks*
- *pre-ship reviews*
- *researcher/FOP launch support logistics*

4 - PAYLOAD TO FSP FOR REVIEW, INTEGR & FLIGHT
- *acceptance, integration*
- *preflight readiness accept*
- *payload launch & return*
- *de-integrate or refly*
- *post-flight reports*

?

Who Are the Key Partners?

- **NASA Flight Opportunities Program:** *solicit research payloads, fund flight providers, coordinate manifesting & facilitate flights*
- **Research Payload Providers:** *upgrade research payloads to flight platform readiness status*
- **Flight & Integration Services Companies:** *team up to ensure payload readiness, integration, flight, and intact return*
- **Spaceport Services Entities:** *support safe pre-flight ground processing, launch/reentry operations*

What are the Vehicle Paths?

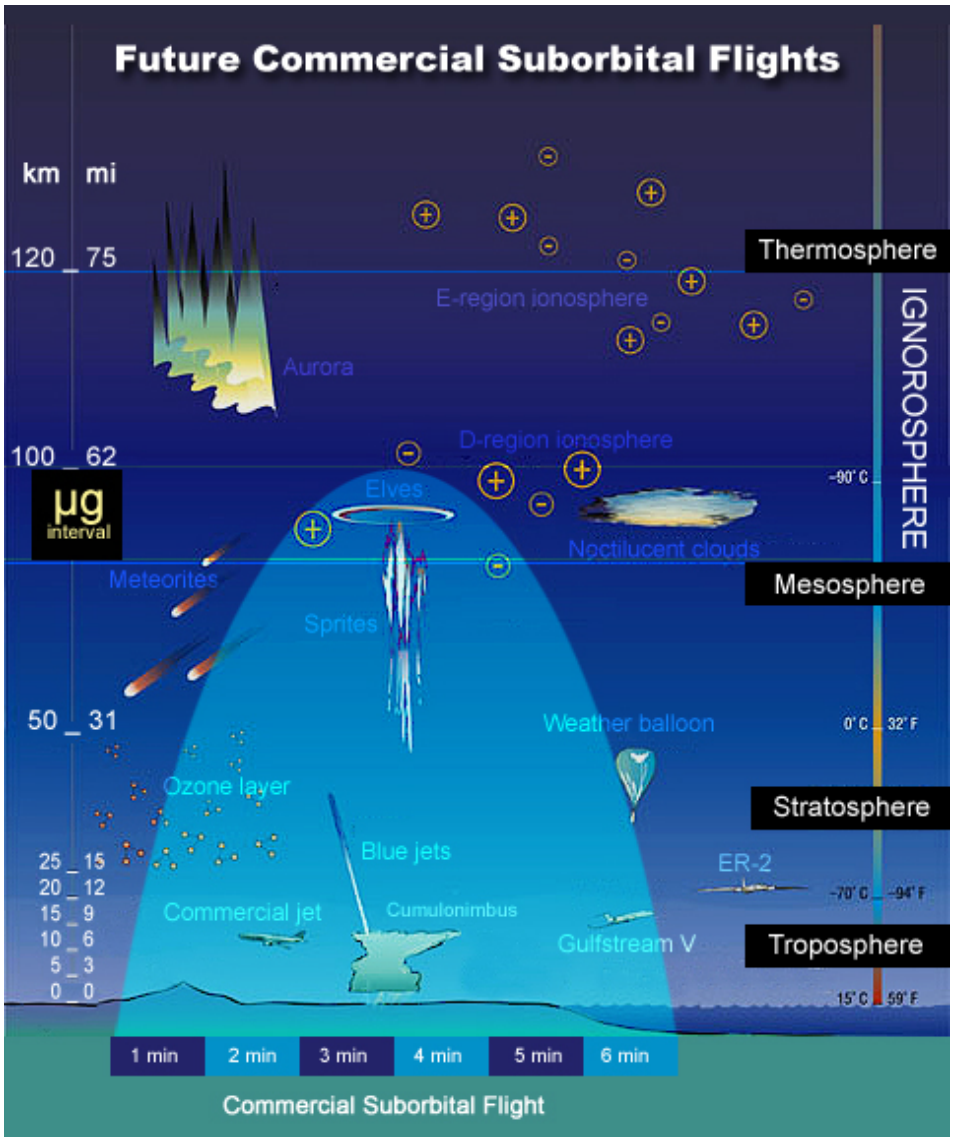

- ***Parabolic Aircraft*** for short, micro-g, variable-g
- ***Balloons*** for high-altitude long-duration access
- ***Suborbital Vehicles*** for transport thru atmosphere to near-space, w minutes of micro-g, var-g, w remote sensing up & down

Zero-G Corporation (G-Force One)

- Parabolic flight campaigns flown 4x/year
- 20 sec/parabolas at micro-g, Lunar-g, Mars-g, 40 parabolas/day, 4 days/campaign, pressurized
- Payloads can be large, human-tended (3-4/team), but need to fit thru loading door w forklift

Near Space Corp (3 Balloon Types)

- Nano Balloon System (NBS): 1kg
- Small Balloon System (SBS): 10 kg
- Hi-Alt Shuttle System (HASS): 10 kg
  - Auto-glide from altitude to GPS waypoint
- 30-35 km altitude, unpressurized
- Up to 6 hr duration float at altitude
- Payloads automated
- Flight opportunities available now

Masten Space Systems (Xaero)

- 12kg mass payload
- ~20 km average altitude based on payload mass
- Target is 100 km
- VTVL guided rocket
- Payloads must be self-contained, automated
- Pressure sealed

UP Aerospace (SpaceLoft)

- 36 kg to 115km
- Payloads fit in provided cylindrical payload canisters which stack
- Ballistic trajectory
- Can provide power and trigger signals to payloads
- Payloads automated
- Flight opportunities available now
- Unpressurized

Virgin Galactic (SpaceShip Two)

- 100+ km altitude, payloads mostly automated, payload compartment is pressurized
- 3+ minutes of micro-g, Lunar or Mars-g
- Flight in summer 2013 (approximate)

Platform Accommodation Examples

Specification	Zero-G	Up Aerospace	Near Space	Masten Space Systems	Virgin Galactic
Vehicle Name & Type	***G-Force One*** Parabolic Aircraft	***SpaceLoft XL*** VTHL sRLV	***Hi-Alt Balloons*** - Small/Nano - Shuttle (HASS)	***Xaero*** VTVL sRLV	***SpaceShip Two*** HTHL sRLV
Altitude & Flt. Frequency	11 km 40 cycles/day 3-4 days/wk	115 km Freq = TBD	35 km Freq = TBD	115 km Freq > daily	115 km Freq > daily
Launch Site	Ellington Field, Houston, TX	Spaceport America, NM	Tillamook, OR	Mojave Air & Spaceport, CA	Spaceport America, NM
Micro-g Environ	20 sec/cycle followed by 2g	3+ min	N/A	3+ min, <0.001 g	3+ min, TBD
Payload Mass & Volume	> 100 kg > 27 cu ft 3-4 people	36 kg total multiple PLs in cannisters	10 kg or 1 kg	10 kg at 30 km	TBD, “middeck” lockers, cubelabs
Power	28 vdc, 110vac	3.7 to 32 vdc	See PUG	12 or 24 vdc	See PUG

What are Major Partner Benefits?

Partners

Industry
Academia
Government

NASA/FOP
PL Select, Fund FSPs, and Pathfinding Services

Commercial Flight and Integration Services

Benefits

- *Commercial Products*
- *Knowledge*
- *Flight Campaigns*

Space Technology Development** for future missions;* ***Stimulate Industry

- *Industry Growth thru Service Delivery*
- *Innovation and Enhanced Capability via Applications*

How Do Researchers Participate?

- Announce Flight Opportunities (AFO) 3 - 4x/year
- Began Dec 2010, open call thru Dec 2014
- Also solicit PLs from OCT and SMD entities
- Hosted on NSPIRES, (see link on FOP site)
- Evaluation Criteria: (*technology focused*)
  - applicability to OCT Tech Roadmaps, risk reduction
  - readiness to fly (TRL 4-5)
  - research team experience
- Awarded as unfunded Space Act Agreement or Memorandum of Agreement (inter-agency)
- Next opportunity window (AFO-5) TBD, 2012

Flight Opportunities Program

Heat Exchanger Payload Pentachart

005-P Development and Validation of Design Tools for Advanced, Two-Phase, Space Heat Exchangers

STATUS QUO

- Single phase heat exchangers are currently used for cooling on ISS and other space platforms.
- Two-phase heat exchangers can be more compact, more efficient , and lower weight
- Questions regarding the effect of gravity on two-phase heat exchanger performance prevent their use.
- Current methods of measuring heat transfer during flow boiling are limited to area averaged heat transfer and temperature.

NEW INSIGHTS

Technology Focus Area: Fluid Physics

A silicon tube 6 mm ID and 1 mm wall thickness is used in con-junction with an IR camera to measure temperature distributions on the wetted wall and to visualize the flow. Half the inner circum-ference is coated with a black opaque paint and the other half is left clear. Mirrors are used to obtain temperature and flow visualization simultaneously.

TEST APPARATUS OVERVIEW:

A closed flow loop has been constructed whereby flow boiling measurements can be made in low-g environments. The experiment is contained within a single test rack (100 cm wide x 750 cm high x 650 cm deep) bolted to the floor of the aircraft. The mass of the apparatus is about 118 kg.

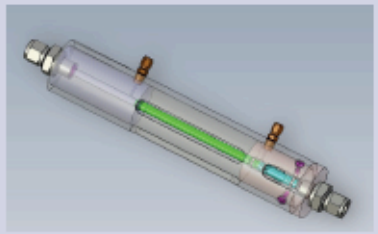

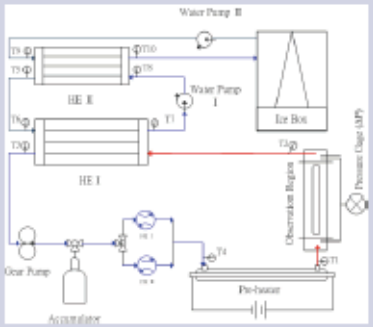

QUANTITATIVE IMPACT

Requested Zero-G conditions

- Up to 30 1.8 g to zero-g parabolas per day
- 4 days of flying

Test Parameters to be varied

- Heater power
- Inlet liquid subcooling
- Inlet mass flow rate
- Heater power

No. of Personnel:

- 3 test personnel per flight

END-OF-PHASE GOAL

Project Impact:

- Results of the tests will allow current models of flow boiling to be tested using local data.
- The data will help develop criterion that will allow the effects of gravity on boiling to be quantified
- The appropriate velocity above which gravity effects can be neglected will be determined

The current experiment allows the local temperatures and heat transfer to be measured with unprecedented spatial and temporal resolution, allowing flow boiling models to be verified.

Questions?

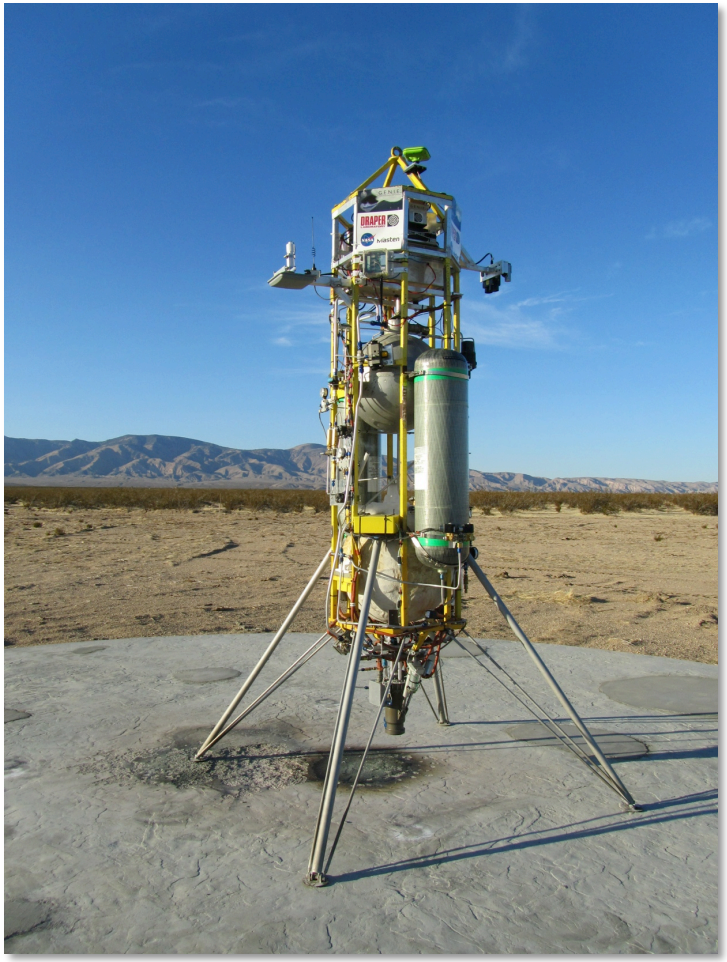

Candidate Research Payload Provider Contact:
Richard Mains
Technology Liaison
NASA Ames Research Center
richard.c.mains@nasa.gov

Flight Opportunities Program Website:
flightopportunities.nasa.gov/

Flight Opportunities Program Management

LK Kubendran
Program Executive
Level I Program Office
NASA Headquarters
laguduva.r.kubendran@nasa.gov

John W. Kelly
Program Manager
Level II Program Office
NASA Dryden Flight Research Center
john.w.kelly@nasa.gov

Dougal Maclise
Payloads Manager
NASA Ames Research Center
douglas.c.maclise@nasa.gov

Mark Collard
Suborbital Platforms Manager
NASA Dryden Flight Research Center
mark.collard@nasa.gov